Diaphragm type pressure gauge
Model P5500 and P6500

According EN 837-3
Nominal size 100 mm or 160 mm
Accuracy: Class 1,6

Features

- Stainless steel construction
- Suitable for corrosive environments
- Protection IP66
- Usable to full scale
- Overload protection up to 5 times F.S.
- Dry or liquid filled

Ranges

-16 ... 0 mbar up to 0 ... 25 bar
-6 ... 0 in. H_2O up to 0 ... 300 psi

Applications

Chemical and petrochemical industry
Machine and apparatus construction
Food an beverage industry
Pulp an paper industry

Technical specification	P5500		P6500	
Dial size [mm]	100	160	100	160
Construction	Open front cylindrical case with blow out disc at the back		Solid front safety pattern cylindrical case with blow out at the back	
Zero adjustment	Optional with micrometer pointer or external zero adjustment (recommended for all liquid filled gauges)			
Measuring principle Range [mbar] [bar] Overpressure limit Pressure type	Horizontal diaphragm 16 25 40 60 100 160 250 400 -16/0 -25/0 -40/0 -60/0 -100/0 -160/0 -250/0 -400/0 0,6 1,0 1,6 2,5 4 6 10 16 25 -1/0 -1/0,6 -1/1,5 -1/3 -1/5 -1/9 -1/15 Continues service up to full scale, alternating service up to 90 % of range 5 times F.S., but max. 40 bar Gauge, vacuum and compound			
Process connection	G ¼ B male, G 3/8 B male, G ½ B male according to EN 837 ¼ NPT male, ½ NPT male according ANSI/ASME B1.20.1 Direct flange DN20/PN40, DN25/PN40, DN50/PN40 Open flange with steel cover flange DN50 Direct flange 1", 1½", 2", 3" 150 lbs RF, 1" 300 lbs RF according ANSI/ASME Others on request			
Connection location	Lower			
Material Chamber flange Diaphragm Sealing Case/bayonet ring Window Dial Pointer Movement	 Stainless steel 316L (1.4404), optional PTFE lining > 200 mbar Duratherm 2.4781 (NiCrCo alloy), ≥ 16 bar Inconel 718 (2.4668), optional with PTFE-lining or Hastelloy C-276 ≤ 200 mbar stainless steel 316Ti (1.4571), optional PTFE-lining or Hastelloy C-276 Viton O-ring Stainless steel 316L (1.4404) Laminated safety glass, optional acrylic glass Aluminum, black markings on white background Aluminum, black, optional micrometer adjustment, red set hand or maximum pointer Stainless steel 304 (1.4301)			
Accuracy	Class 1,6 (1,6 % F.S.), with PTFE-lining class 2,5 (2,5 % F.S.)			
Permissible Ambient temperature Medium temperature Storage temperature Effect	 -20 ... 60 °C, optional ATEX -20 ... 60 °C Max. 85 °C -40 ... 70 °C Max. 0,5 % / 10 K			
Conformity according to RL 2014/34/EU appendix X for mechanical equipment in potential hazardous areas	CE 0044 Ex II 2G Ex h IIC T4 Gb II 2D Ex h IIIC T95°C Db Ta = -20°C to +60°C Optional, Marking File No. 8000395287 at notified body 0044, TÜV NORD CERT			
Protection according EN 60 529/IEC 529	IP66			
Filling liquids	Glycerin, silicone, others on request, only available for ranges ≥ 100 mbar			
Mounting	Standard stem or flange			
Weight ≤ 400 mbar / > 400 mbar [kg]	2,3/1,8	3,8/3,4	2,3/1,8	3,8/3,4
Accessories, options	Valves, gauges with contacts (see G1.K55/E)			

All specifications are subject to change without notice.

General dimensions [mm]

P5500

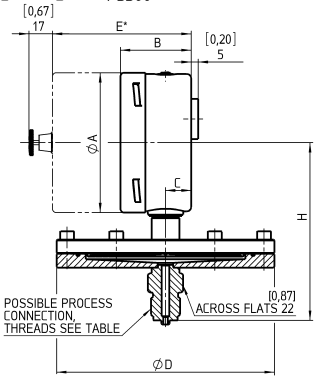

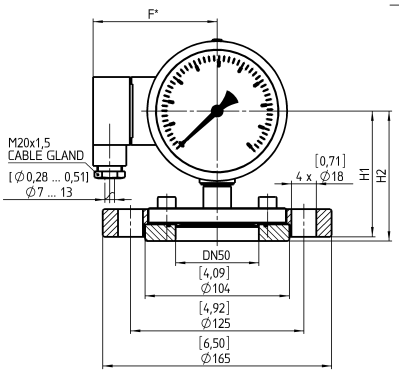

P6500

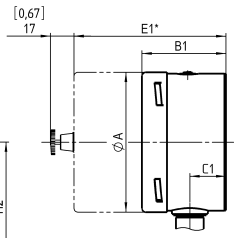

THREADS	CODE
1/4-18 NPT MALE; DIN EN 837	02
1/2-14 NPT MALE; DIN EN 837	04
G 1/4 B MALE; DIN EN 837	13
G 3/8 B MALE; DIN EN 837	14
G 1/2 B MALE; DIN EN 837	15
M20x1,5 MALE; DIN 3852	16
R 1/2 MALE; DIN 2999	KQ

* WITH INTEGRATED CONTACTS

PRESSURE RANGE	SIZE	ØA	B	B1	C	C1	ØD	E*	E1*	F*	H
≥ 0,6 bar	100	[3,97] 101	[2,01] 51	[2,38] 61	[0,73] 18,5	[1,02] 26	[3,90] 99	[3,94] 100	[4,33] 110	[3,50] 89	[5,04] 128
	160	[6,35] 161	[1,96] 50	[2,52] 64	[0,76] 17	[1,11] 28	[3,90] 99	[3,94] 100	[4,49] 114	[4,69] 119	[6,22] 158
≤ 400 mbar	100	[3,97] 101	[2,01] 51	[2,38] 61	[0,73] 18,5	[1,02] 26	[6,18] 157	[3,94] 100	[4,33] 110	[3,50] 89	[4,92] 125
	160	[6,35] 161	[1,96] 50	[2,52] 64	[0,76] 17	[1,11] 28	[6,18] 157	[3,94] 100	[4,49] 114	[4,69] 119	[6,10] 155

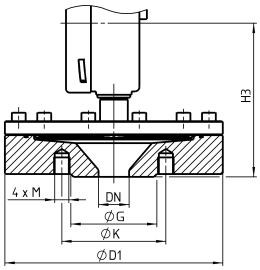

RANGE DN	ØD1 ≥ 0,6 bar	ØD1 ≤ 400 mbar	ØG	H3 NG 100	H3 NG 160	ØK	4 x M
DN20/PN40	[4,13] 105	[6,18] 157	[2,28] 58	[4,17] 106	[5,35] 136	[2,95] 75	M12
DN25/PN40	[4,53] 115		[2,68] 68			[3,35] 85	
DN50/PN40	[6,50] 165	[6,50] 165	[4,02] 102			[4,92] 125	M16
DN1" 150 lbs	–	[4,25] 108	[2,00] 50,8	[4,57] 116	[5,75] 146	[3,12] 79,2	1/2-13 UNC
	[4,25] 108	–		[4,61] 117	[5,79] 147		
DN1" 300 lbs	[4,88] 123,9	–		[4,80] 122	[5,98] 152	[3,50] 88,9	5/8-11 UNC
	–	[4,88] 123,9		[4,76] 121	[5,94] 151		
DN2" 150 lbs	[6,00] 152,4	–	[3,62] 91,9	[4,29] 109	[5,47] 139	[4,75] 120,7	
	–	[6,18] 157		[4,84] 123	[6,02] 153		
DN3" 150 lbs	[7,52] 190,9	–	[5,00] 127	[4,29] 109	[5,47] 139	[6,00] 152,4	THROUGH HOLE [0,75] Ø19,1
	–	[7,52] 190,9					5/8-11 UNC

FLANGE DN50		
SIZE	H1	H2
100	[4,61] 117	[4,72] 120
160	[5,79] 147	[5,91] 150

Order information

Size	Type	System material	Execution	Process connection	Connection orientation	Range	Engineering units	Filling	Options
(100) 100 mm **(160)** 160 mm	**P5500** **P6500**	**(S)** Diaphragm 316Ti (1.4571) or Duratherm or Inconel, flange 316L (1.4404) **(ST)** Diaphragm 316Ti (1.4571) or Duratherm or Inconel, flange 316L (1.4404), PTFE-lined (accuracy class 2,5 [2,5 % F.S.], range >100 mbar, not for NPT threads) **(HS)** Diaphragm Hastelloy C-276, flange 316L (1.4404)[1]	**(D)** IP66 **(L)** Liquid filled IP66 [1]	**(02)** ¼ NPT male **(04)** ½ NPT male **(13)** G ¼ B male **(14)** G 3/8 B male **(15)** G ½ B male **Flange:** **(DN20)** DN20 **(DN25)** DN25 **(DN50)** DN50 **(10-150)** 1" 150# **(15-150)** 1½" 150# **(10-300)** 1" 300# **(20-150)** 2" 150# **(30-150)** 3" 150# **(R50)** Open flange DN50	**(L)** Lower	**-16/ 0** … **-400/ 0** **0/ 16** **0/ 25** **0/ 40** **0/ 60** **0/ 100** **0/ 160** **0/ 250** **0/ 400** **-1/ 0** **-1/ 1,5** **-1/ 3** **-1/ 5** **-1/ 9** **-1/ 15** **-1/ 24** **0/ 0,6** **0/ 1** **0/ 1,6** **0/ 2,5** **0/ 4** **0/ 6** **0/ 10** **0/ 16** **0/ 25**	**MBAR** **BAR** psi and others on request	**(=)** Standard no filling **(GR)** Glycerin **(GV)** Silicone **( )** Contact type and function (see data sheet G1.K55/E) [1]	**(6B)** Cleaned for Oxygen service **(ATEX)** ATEX approval **(CS)** Dual scale **(DA)** Dial marking **(EA)** External zero adjustment **(EP)** Maximum pointer, adjustable **(MP)** Micrometer pointer **(NH)** Tagging wired **(PD)** Acrylic glass **(SH)** Red set hand stationary
		[1] not for vacuum and compound ranges	[1] liquid filled only for ranges ≥ 100 mbar	others on request				[1] ranges ≤400 mbar only available with dial size160 mm	Option listing starts with "X", followed by options separated by "=" Example: X=NH=SG=FW

How to order

Size	Type	System material	Execution	Process connection	Connection orientation	Range	Engineering unit	Filling	Option
100	P5500	S	D	04	L	0/250	MBAR	=	NH

Ashcroft Instruments GmbH

Website: www.ashcroft.eu **e-Mail:** sales@ashcroft.com

Germany
Max-Planck-Str. 1, D-52499 Baesweiler
P.O. Box 11 20, D-52490 Baesweiler
Tel.: +49 (0) 2401 808-0, **Fax:** +49 (0) 2401 808-125

France
48, Chemin des Landes
F-69700 Montagny
Tel.: +33 (0) 9 65 32 71 31, **Fax:** +33 (0) 4 72 39 10 57

United Kingdom
Unit 17 & 18 William James House
Cowley Road, Cambridge CB4 0WX
Tel.: +44 (0) 12 23 39 55 00, **Fax:** +44 (0) 12 23 39 55 01