Needle valve PN 420 DN 5 female / female and male / female

Type 1

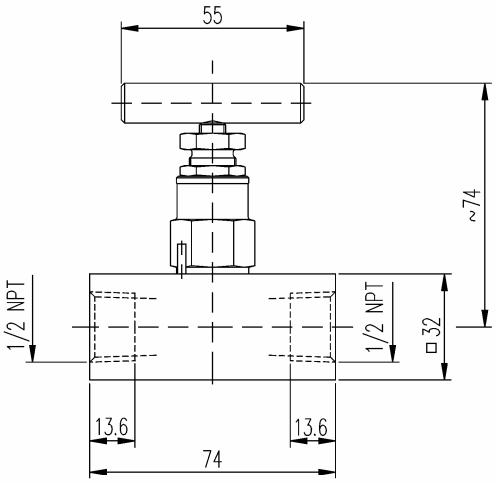

Type 2

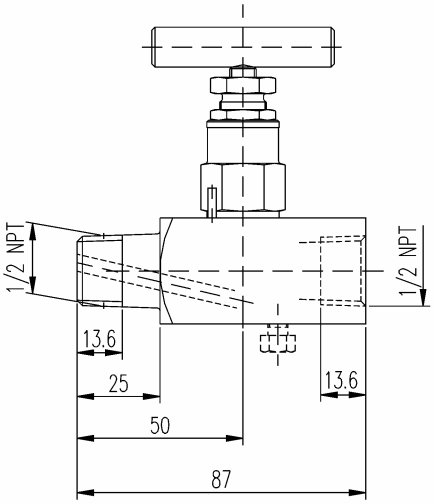

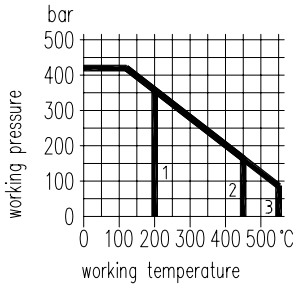

1 PTFE packing
2 graphite packing - 1.0460
3 graphite packing - 1.4404

Type	Material	Connections Inlet	Connections Outlet	Remarks	Part no.
1	steel st. stl.	1/2 NPT female	1/2 NPT female	without vent screw	50-V02-1-SC-50-PN420 50-V02-1-SS-50-PN420
2	steel st. stl.	1/2 NPT male			04-V02-1-SC-50-PN420 04-V02-1-SS-50-PN420
	steel st. stl.			with vent screw	04-V02-1A-SC-50-PN420 04-V02-1A-SS-50-PN420

Components	Steel	Stainless steel [1]
	DIN-Material Number	
Body [2]	1.0460	316L (1.4404)
Bonnet	316 (1.4401)	
Valve stem	316L (1.4404)	
Needle tip [3]	1.4122 [4]	316Ti (1.4571)
Packing	PTFE up to 200 °C (graphite up to 550 °C)	
Gland nut	1.0501	304 (1.4301)
T-handle	stainless steel	

- Surface: steel phosphatized
- For max. working pressure 700 bar (10.000 psi)
- External stem thread
- Stem with cold rolled surface, back seat and non-rotating needle tip
- Type with 1/4 NPT thread on request
- The valves can be supplied according to NACE-standard

On request:
- Anti-tamper facility
- Panel mounting
- Extended body on male inlet port
- Padlocking facility

[1] Can also be supplied for oxygen service.
Please notice order instruction B 3!
[2] Available with inspection certificate 3.1.B acc. to EN 10 204
[3] Also available with soft tip in KEL-F® (PCTFE) or Delrin® (POM)
[4] 1.4122 quenched and tempered

All specifications are subject to change without notice.